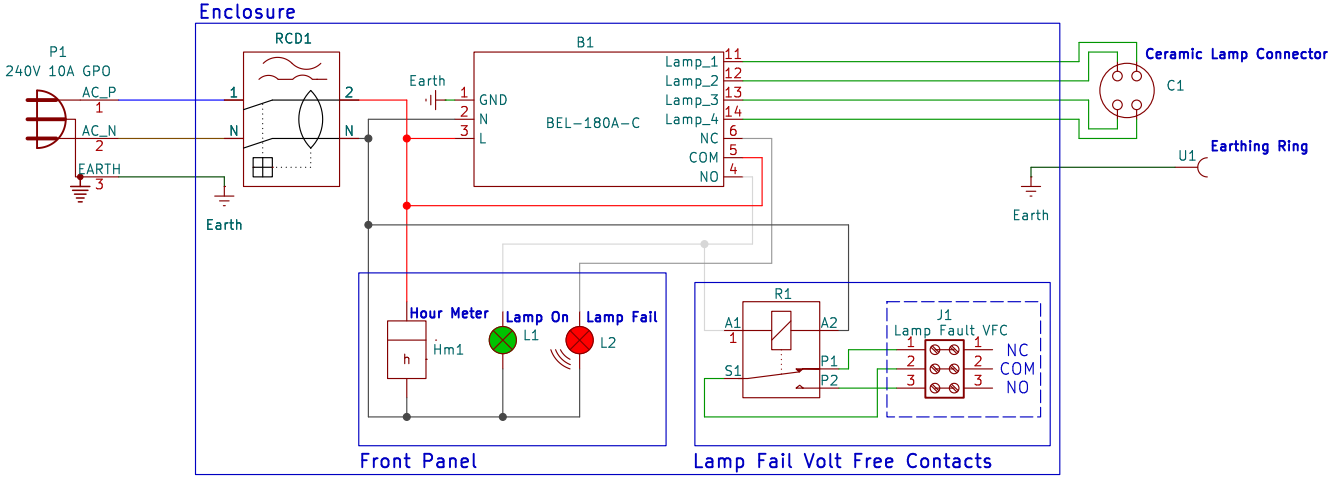

ADVANCE UV SYSTEMS PTY LTD

Title: PSL1B-180-A		
Size: A5	Date: 2025-09-10	**Rev: 1.0**
KiCad E.D.A. 9.0.1		Id: 1/1